REVISION LIST								
ITEM	ECN NO.	POSITION	DESCRIPTION WAS	DESCRIPTION IS	DATE	UPDATED BY	APPROVED BY

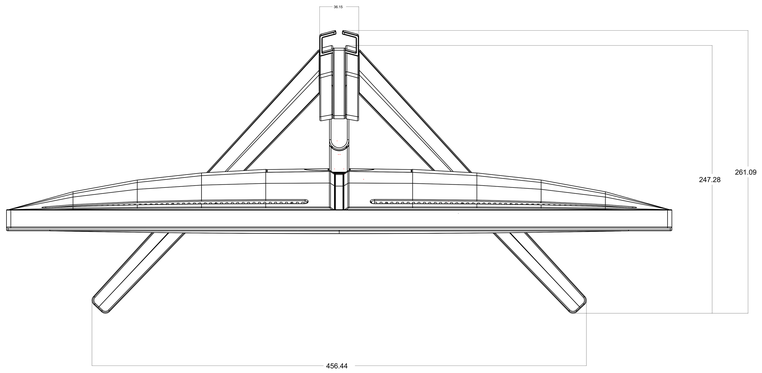

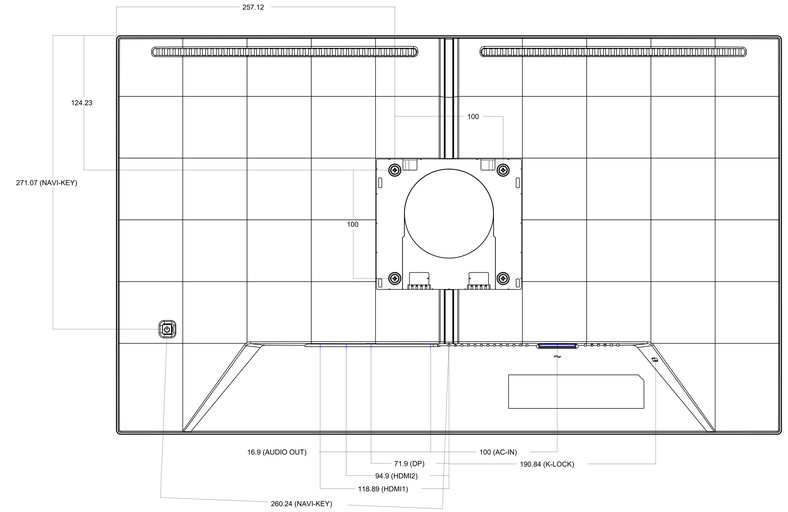

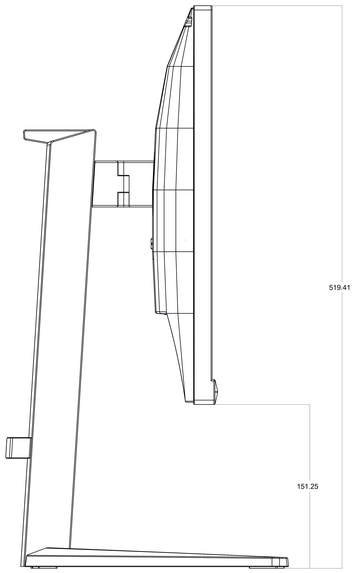

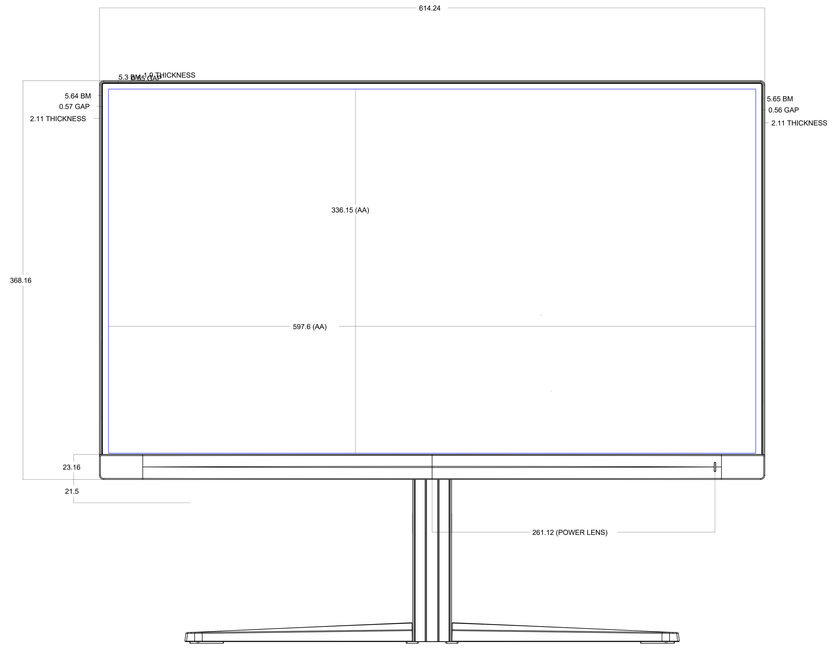

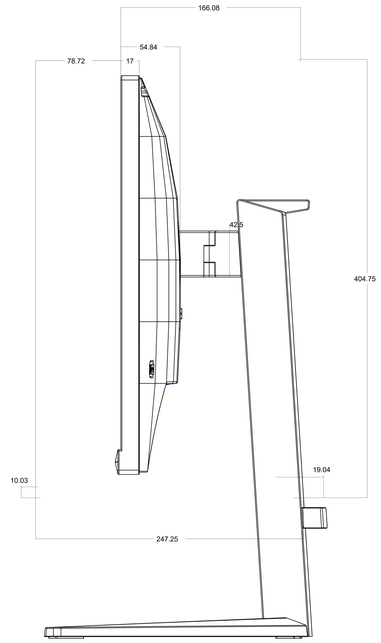

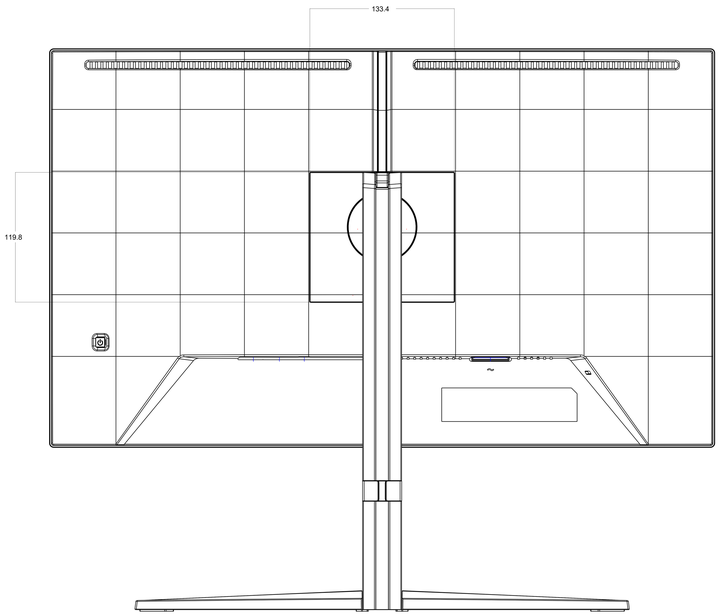

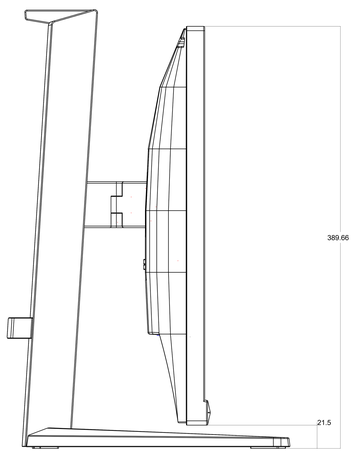

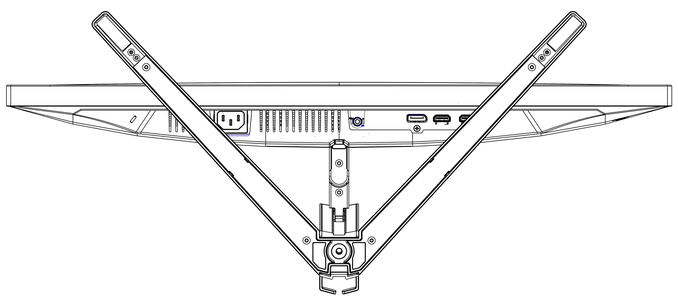

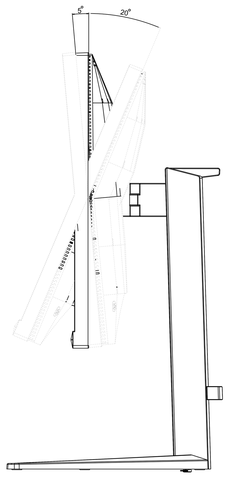

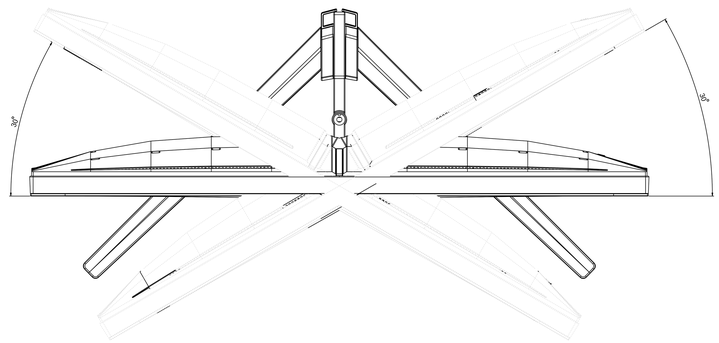

RoHS

TOLERANCE UNLESS OTHERWISE SPECIFIED (mm)			
RANGE OF DIM	METAL & PLASTIC	POLYFOAM	CARTON
0~30	± 0.10	±0.2-0	±2.0-0
30~120	± 0.15		
120~400	± 0.20		
400~1000	± 0.25		
1000~2000	± 0.30		
2000~3000	± 0.35	±0.3-0	
3000~5000	± 0.40	±0.4-0	
ANGLE (SHEET METAL)	± 0.5°		
Internal Diameter of Plastic Screw Bosses			

MODEL: PROE ID: 5500_FNF_FOXN_TOTAL PROE ID: FNF_FOXN5500_SHT191

UNIT: (MM) TOLERANCE UNLESS OTHERWISE SPECIFIED DIMENSIONS ARE IN MM

SCALE: 1.000 SUITABLE: 27M2N5500 SHT191

DRAWN: Kai Chang 24/10 ISSUED: 24/10/24 TPV Technology Ltd.

CHECK: Middle Tang 24/10 ISSUED: 24/10/24

1 of 1 SHT | TOP | MAIN

DO NOT SCALE DRAWING